Introduction GIT

Jun-Ru Chang
jrjang@gmail.com

Outline

- Introduction VCS
- Introduction GIT

Introduction VCS

- VCS: Version Control System
  - We will be known forever by the tracks we leave
  - Automatic backup
  - Sharing on multiple computers
  - Version control and branching
  - Logging where be changed

Introduction VCS

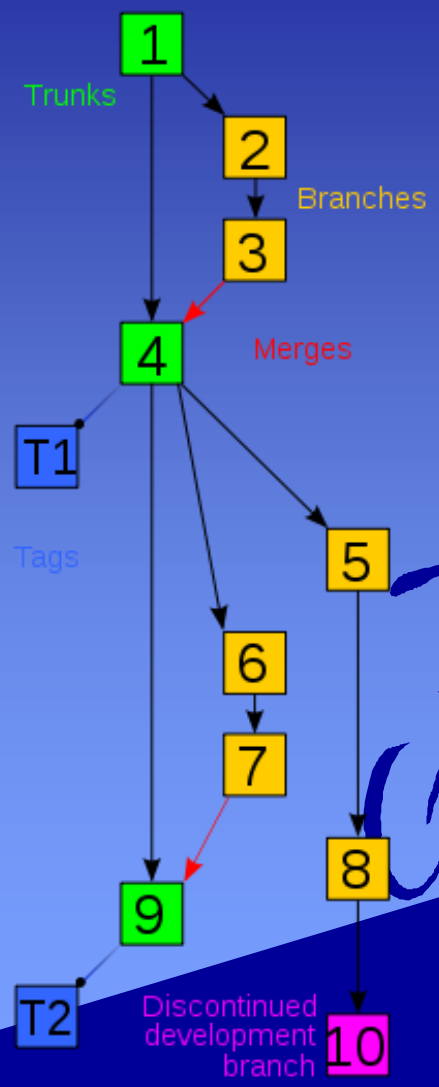

Introduction VCS

- Local VCS

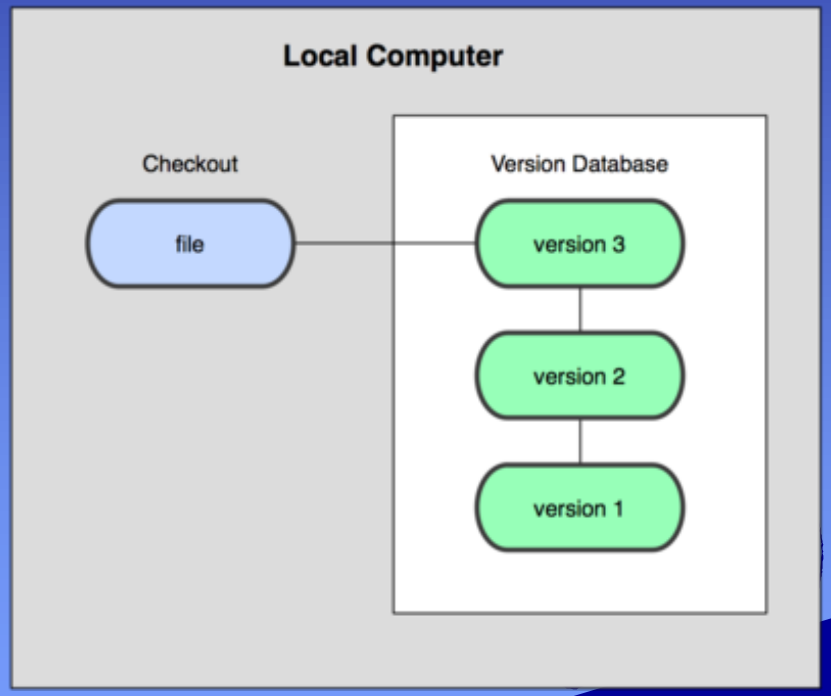

Introduction VCS

- Centralized VCS
  - Subversion (SVN)
    - checkout
    - update
    - commit

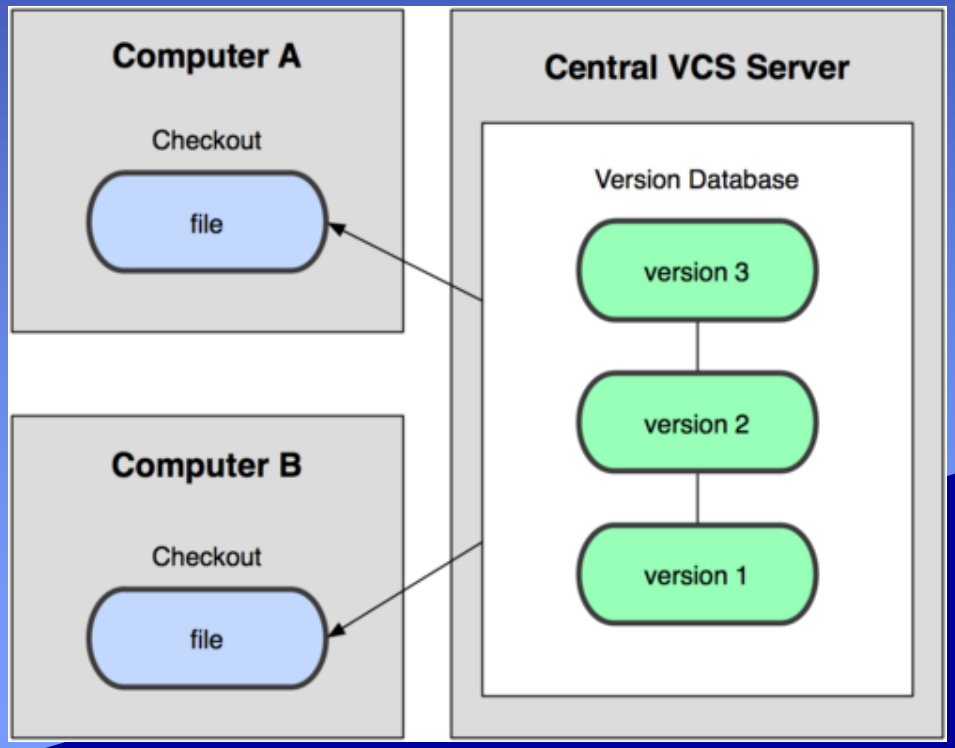

Introduction VCS

- Distributed VCS
  - GIT

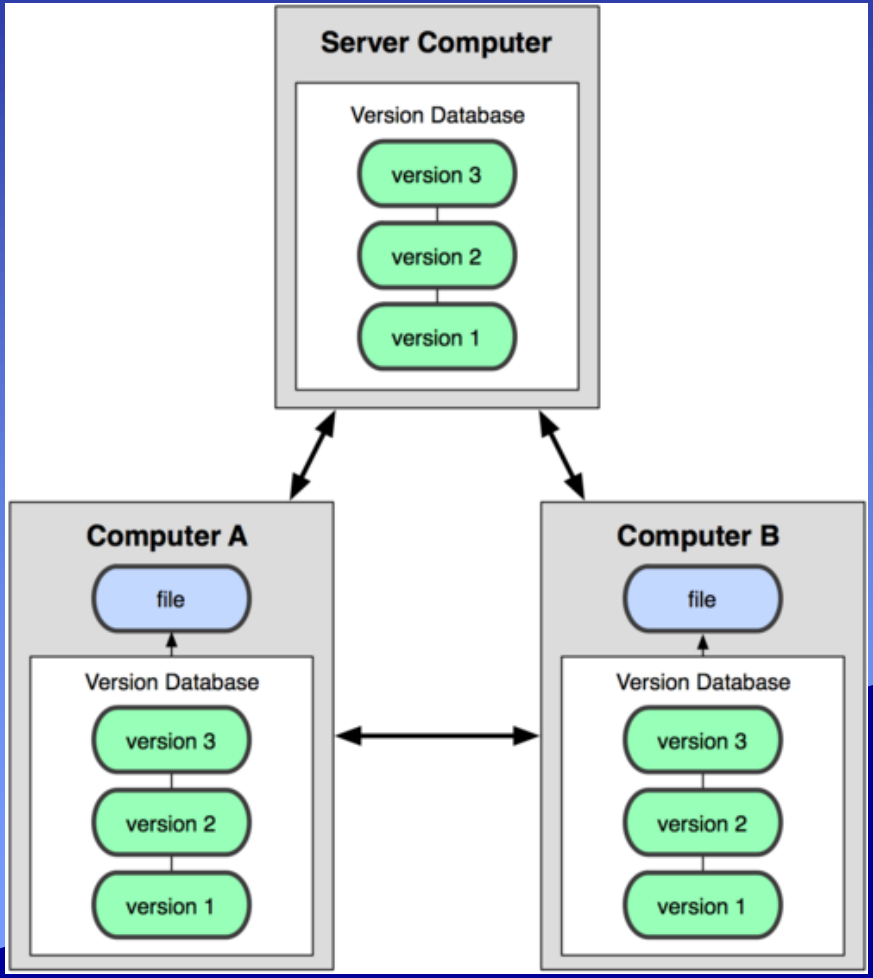

Introduction GIT

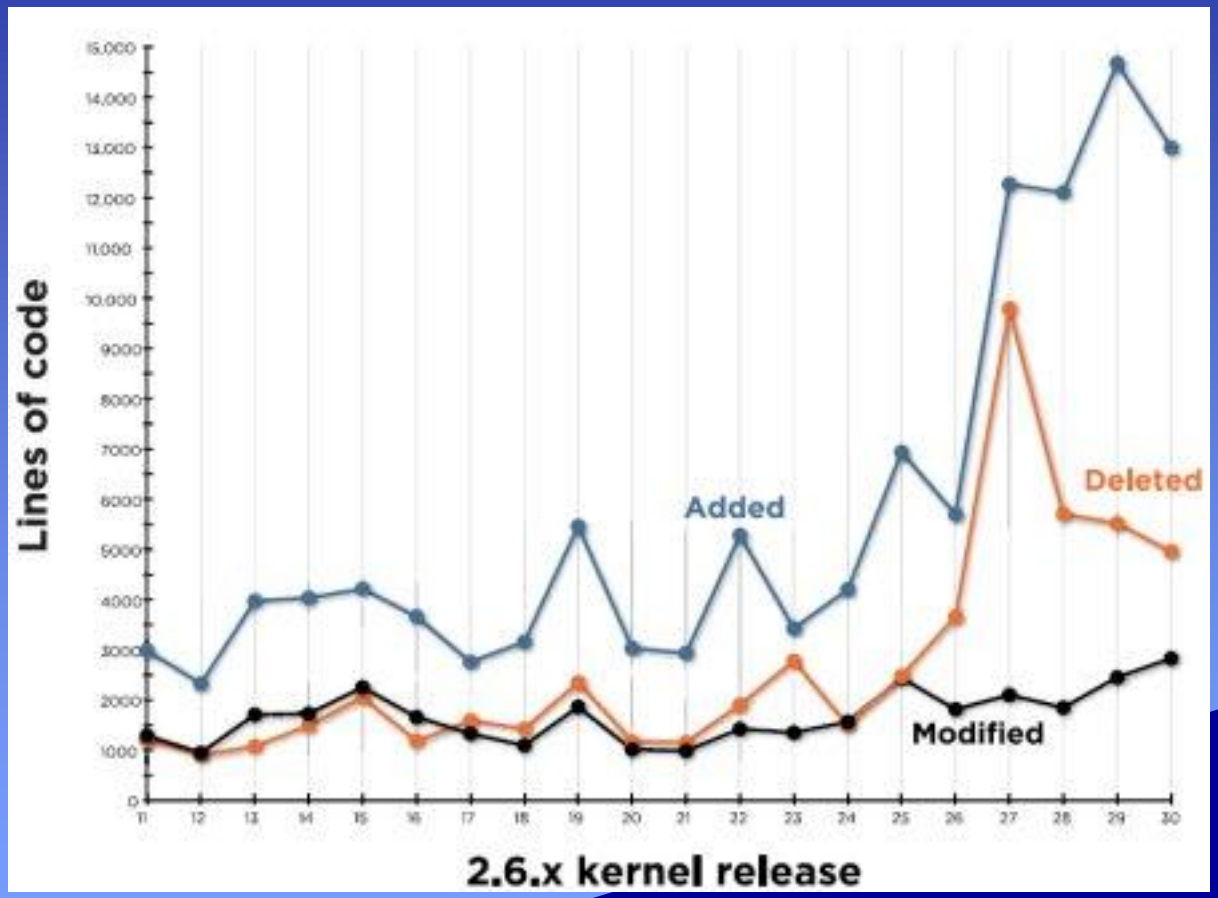

Introduction GIT

- Linus Torvalds
- Orignally using VCS developed by BitKeeper
- Feature
  - Fast
  - Decentralize revsion control

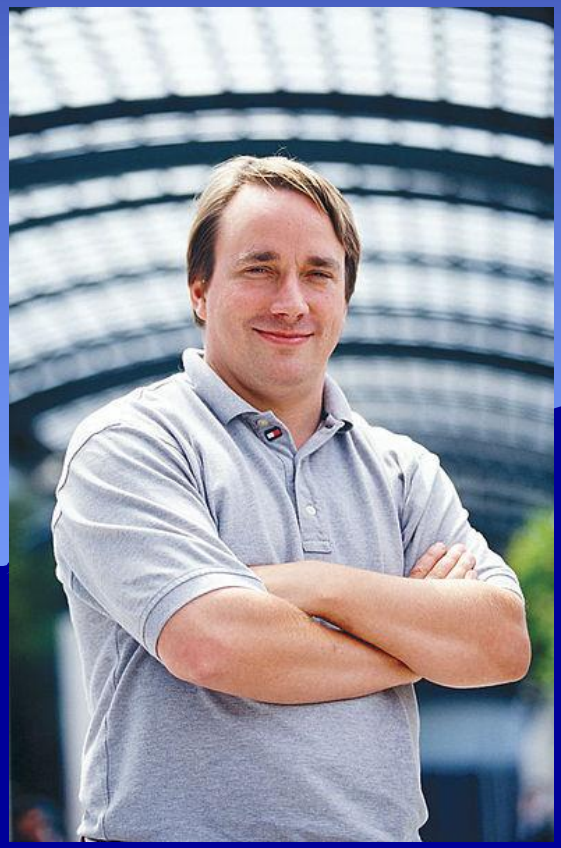

Introduction GIT

- Git basics
  - Snapshot, not differences
  - Nearly every operation is local
  - Three stages

Introduction GIT

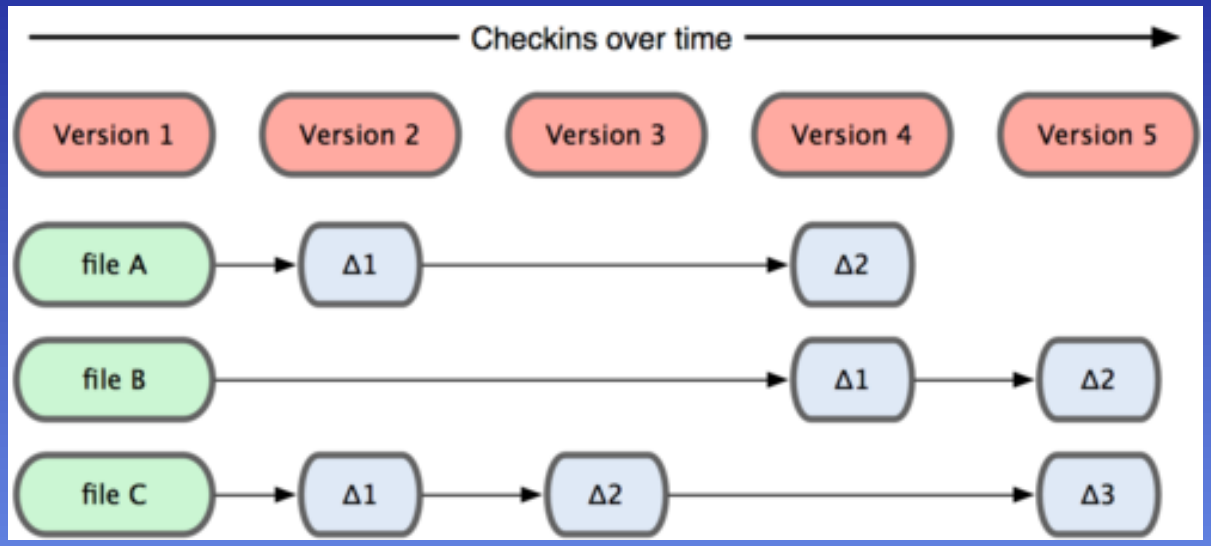

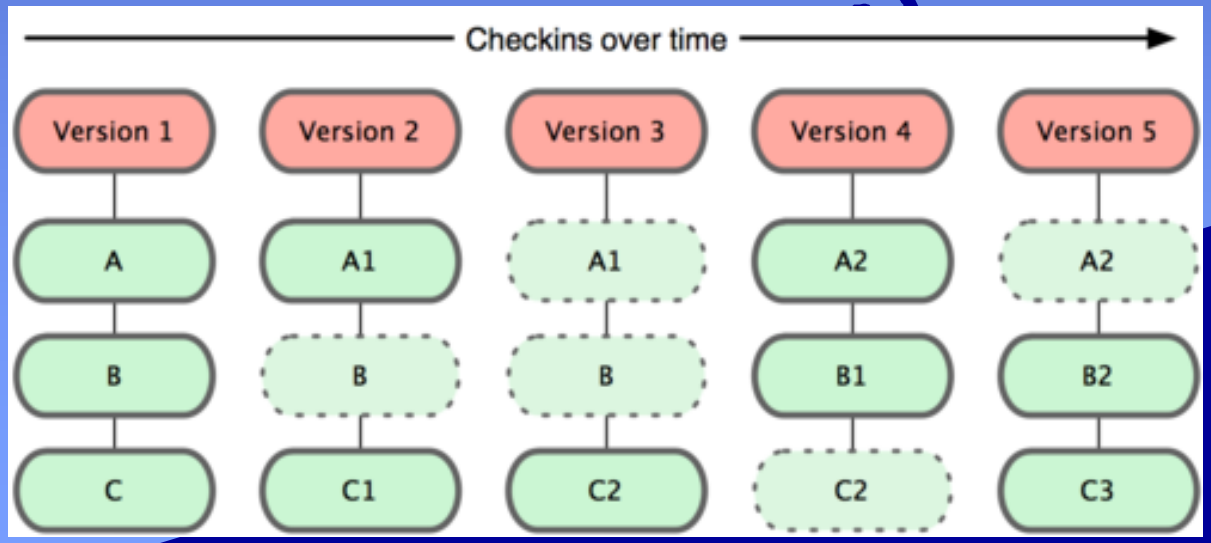

Introduction GIT

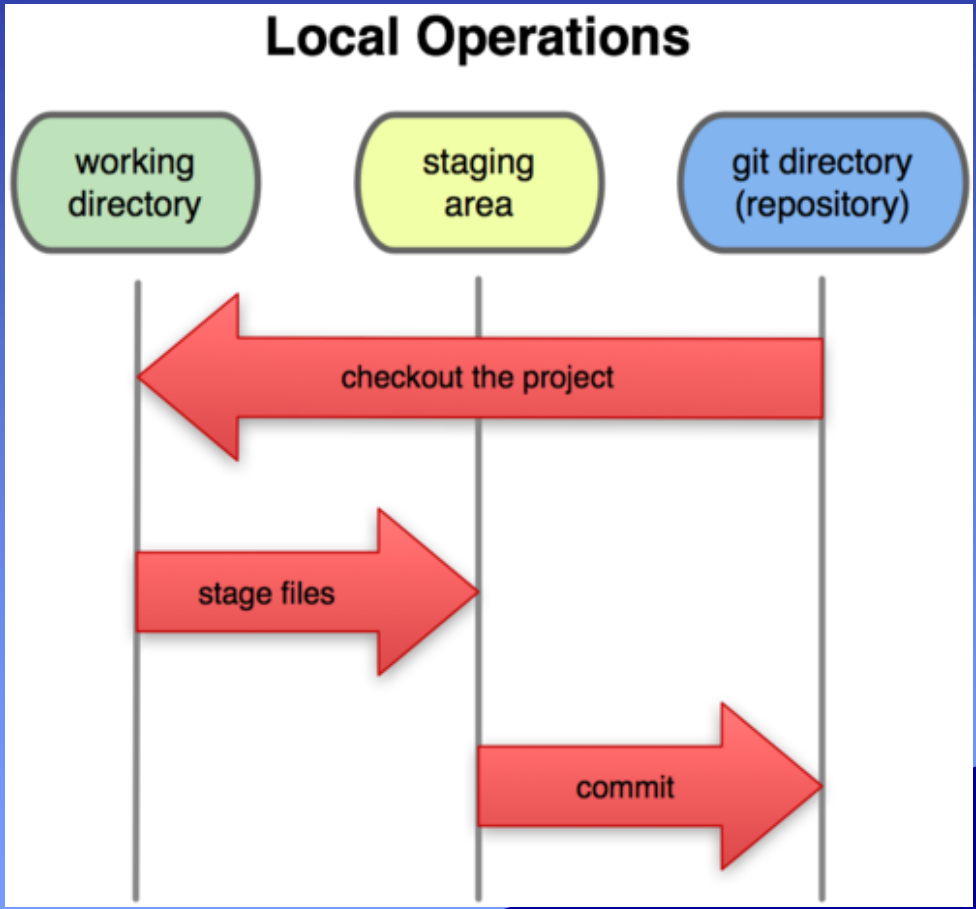

Introduction GIT

- Github
  - https://github.com/
- msysgit
  - http://code.google.com/p/msysgit/downloads/detail?name=PortableGit-1.7.10-preview20120409.7z&can=2&q=

Introduction GIT

- Register account on Github
- Unzip msysgit
- Generate key
  - $ ssh-keygen -t rsa -C "user@email"
- Import public key into Github
  - $ ssh -T git@github.com
- Create a new repository

Introduction GIT

- $ git config --global user.name "user1"
- $ git config --global user.email "user1@email"

Introduction GIT

- $ mkdir test; cd test
- Getting a repository
  - importing existing project or directory into git
    $ git init

    $ git remote add origin git@github.com:user1/test.git
  - cloning an existing git repository from another server
    $ git clone git@github.com:jrjang/ppt.git

Introduction GIT

- git add
- git rm
- git mv
- git diff
- git commit
- git log

- $ touch test1.c
  $ touch test2.c
  $ git add test1.c test2.c
  $ git commit -c "xxx"
  $ git rm test2.c
  $ git mv test1.c test.c
  $ git status
  $ git commit -c "yyy"
  $ git log
  $ echo "test" > test.c
  $ git diff

Introduction GIT

- git status

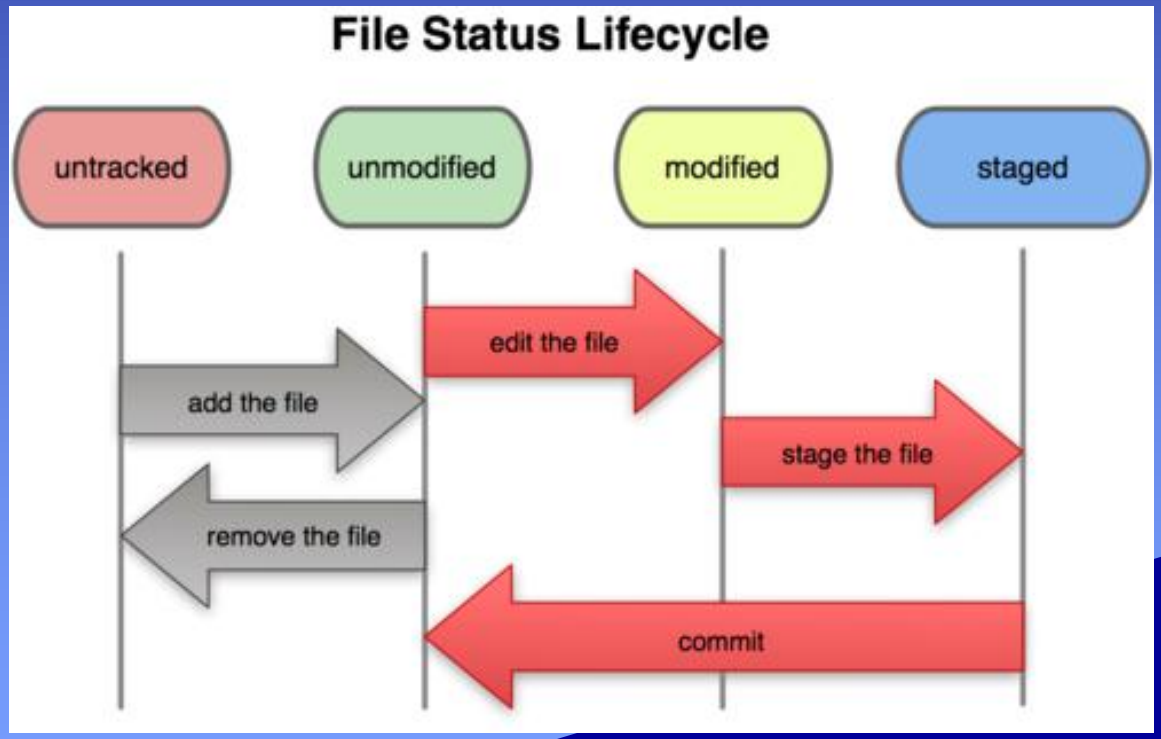

Introduction GIT

- git commit --amend
- git reset HEAD file

- $ touch test3.c
  $ git add test3.c
  $ git reset HEAD test3.c

Introduction GIT

- Working with remotes
  - git pull
  - git push

- $ git push origin master
- $ git pull git@github.com:user1/test.git

Introduction GIT

- What a branch is

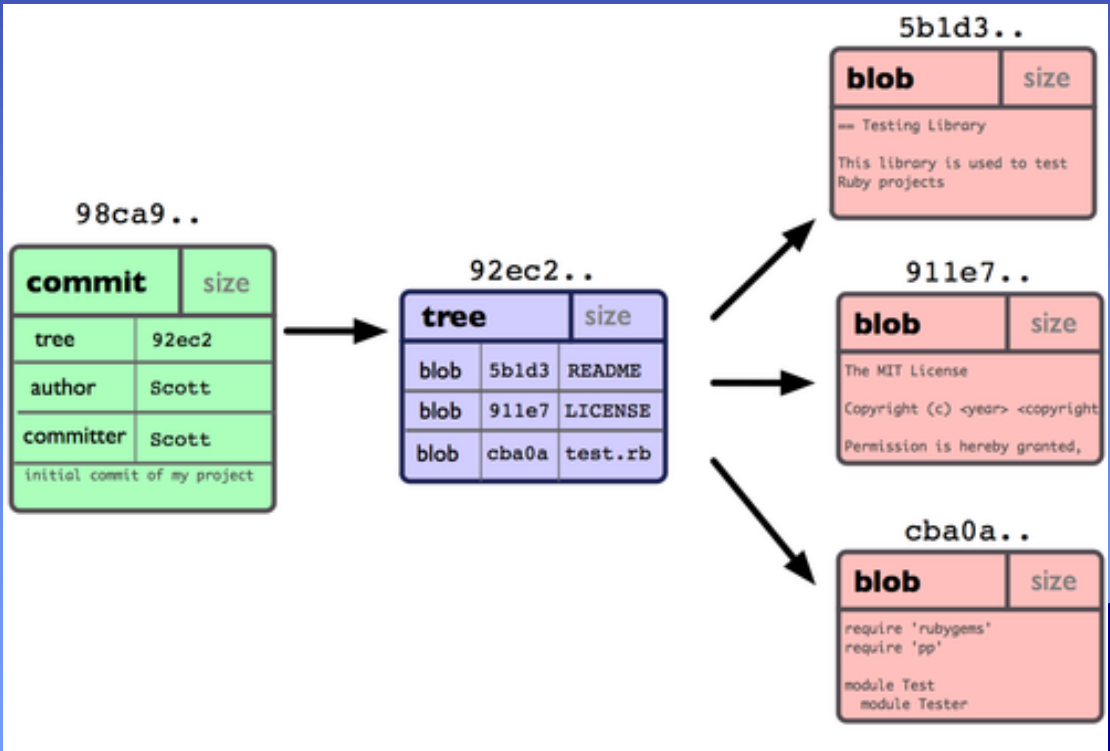

Introduction GIT

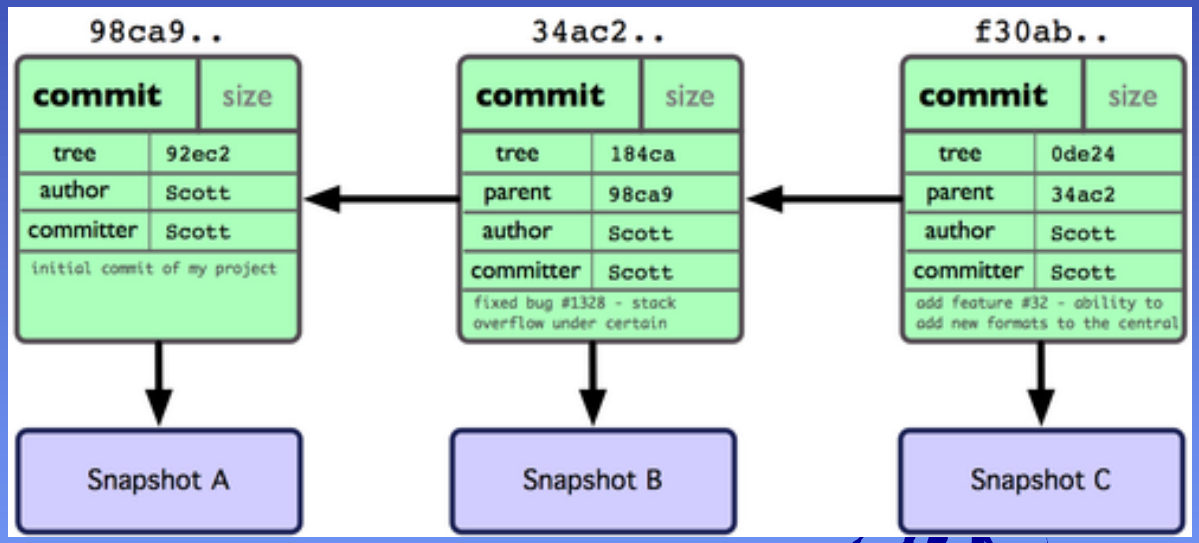

Introduction GIT

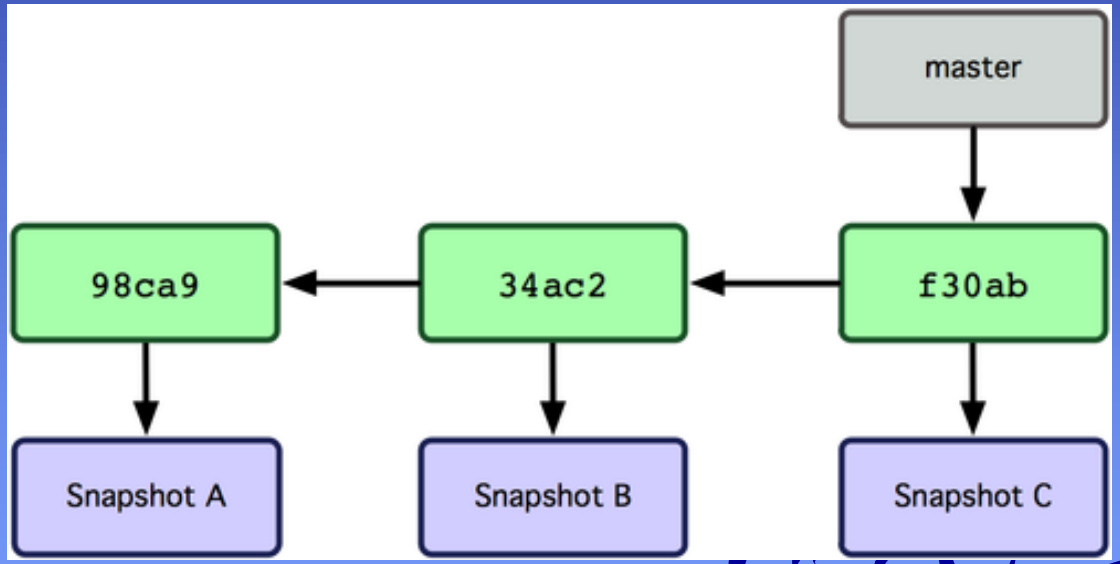

Introduction GIT

- git checkout
- git branch

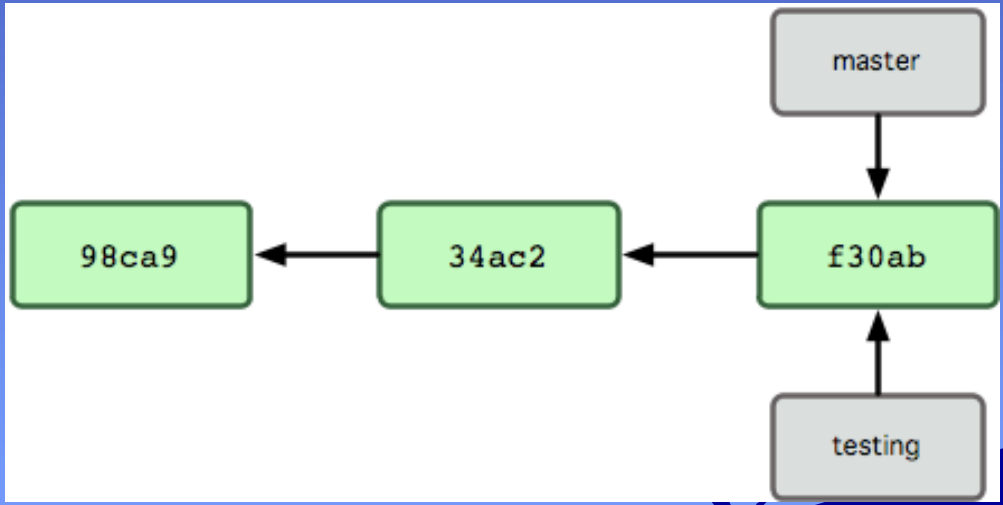

Introduction GIT

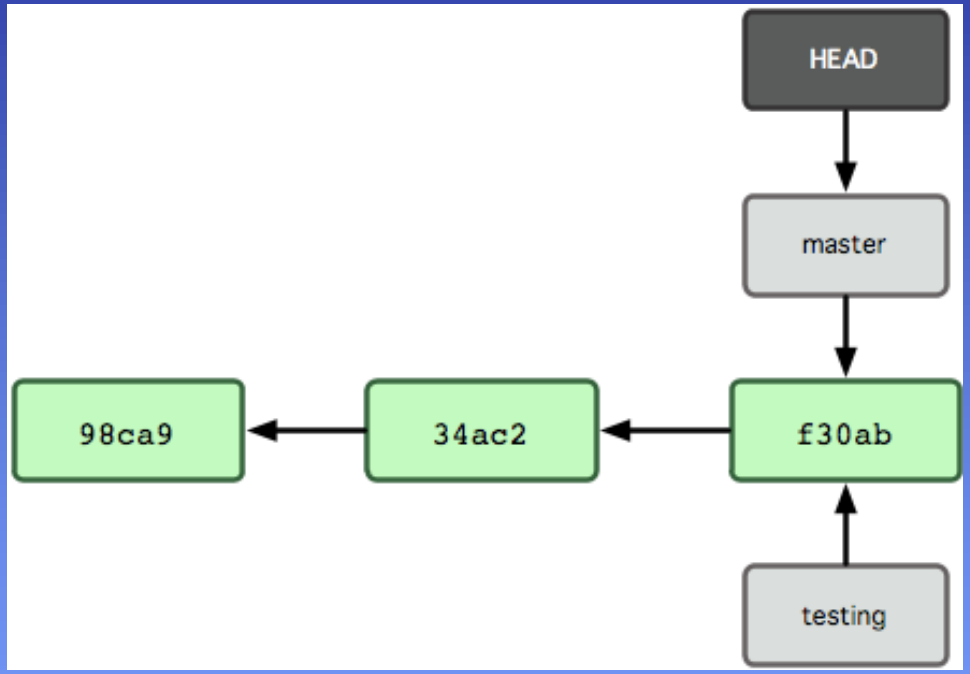

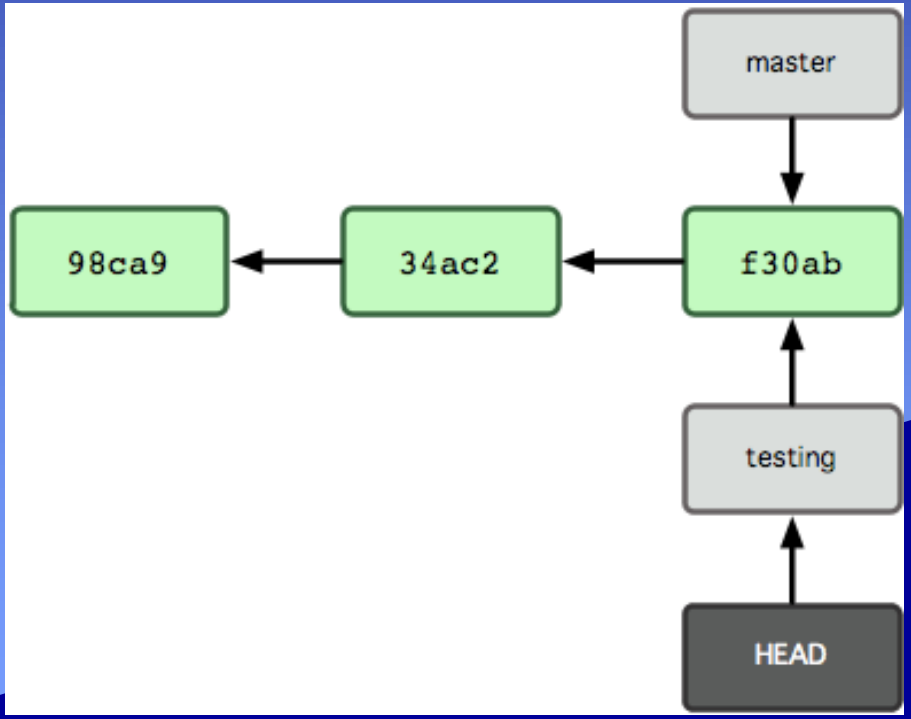

Introduction GIT

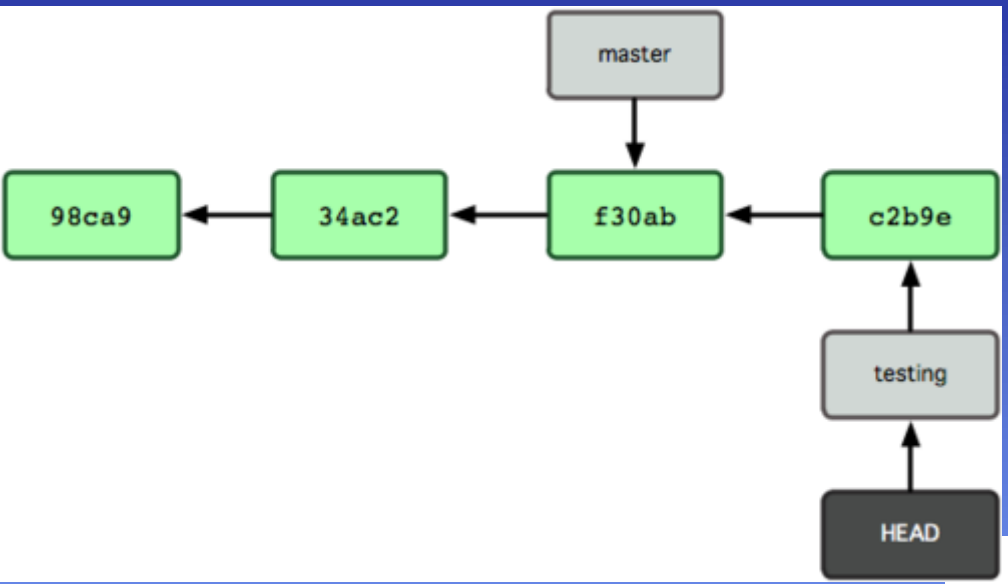

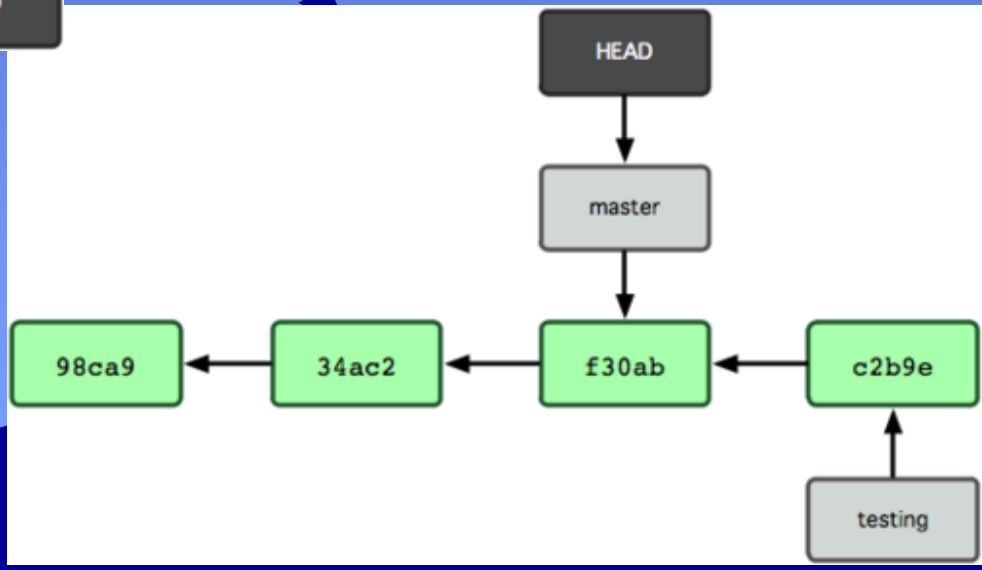

Introduction GIT

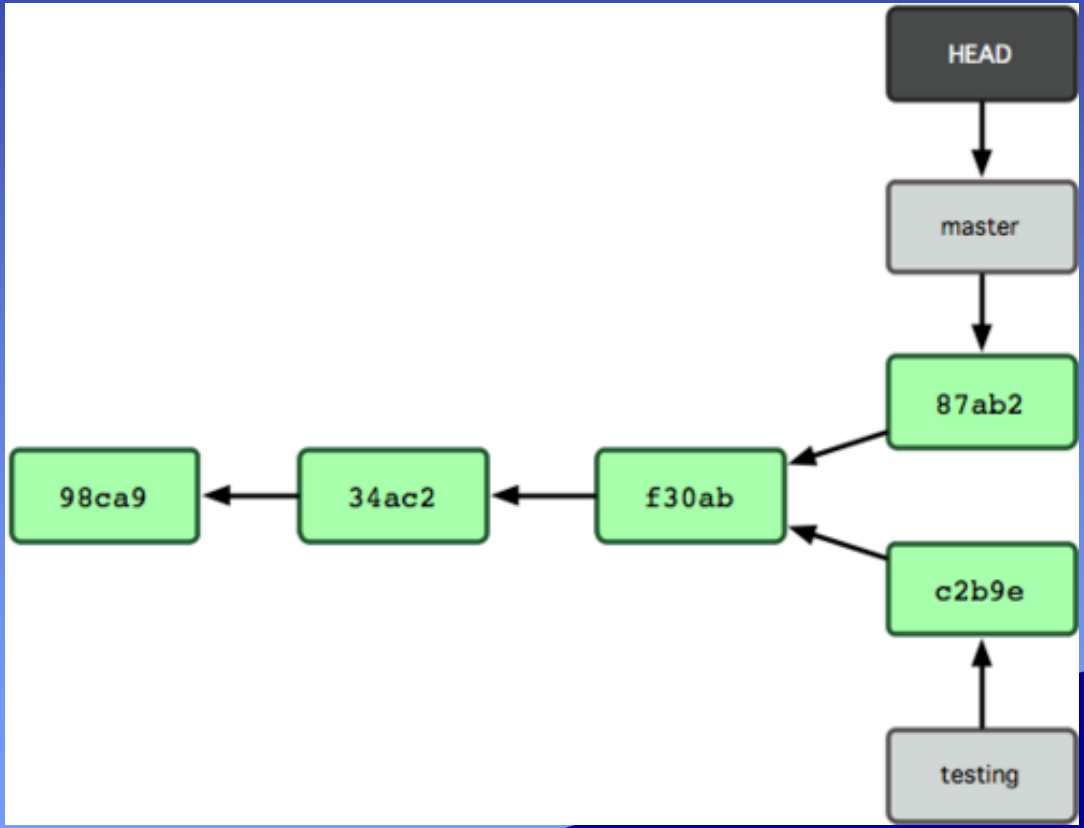

Introduction GIT

- $ git checkout -b testing
  $ git branch
  $ touch haha.c
  $ git add haha.c
  $ git commit -c "in testing"
  $ git checkout master
  $ touch hehe.c
  $ git add hehe.c
  $ git commit -c "in master"
  $ git show-branch

Introduction GIT

- git checkout master
- git checkout -b hotfix

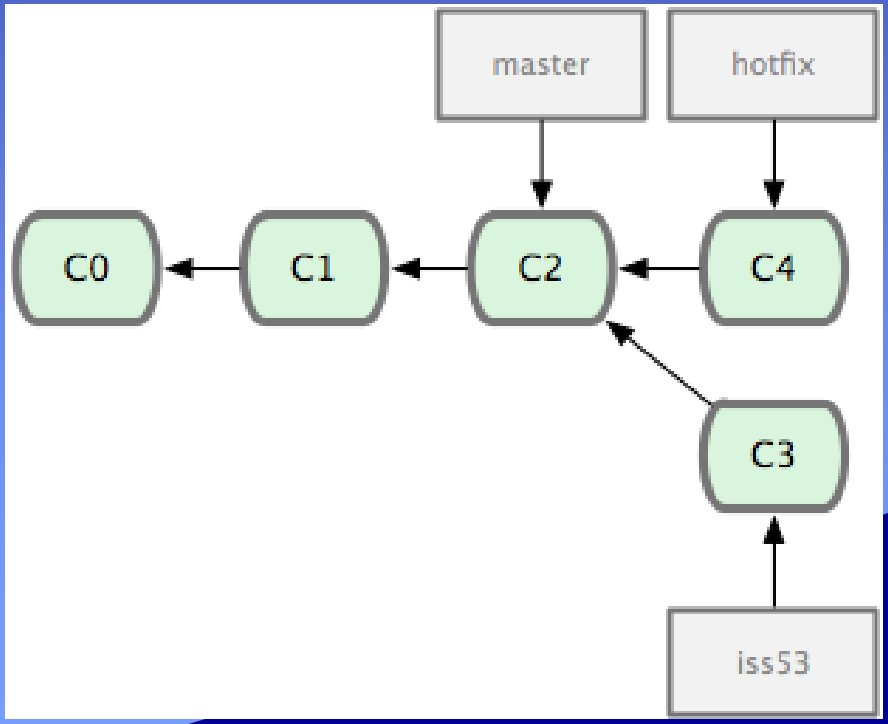

Introduction GIT

- $ git checkout master
- $ git merge hotfix
- $ git branch -D hotfix

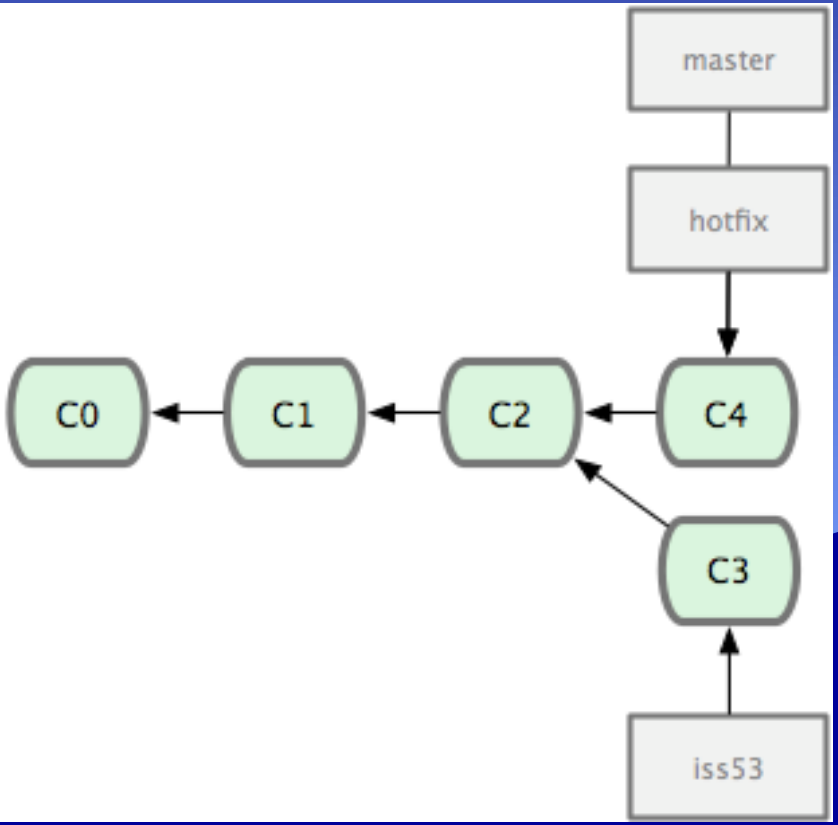

Introduction GIT

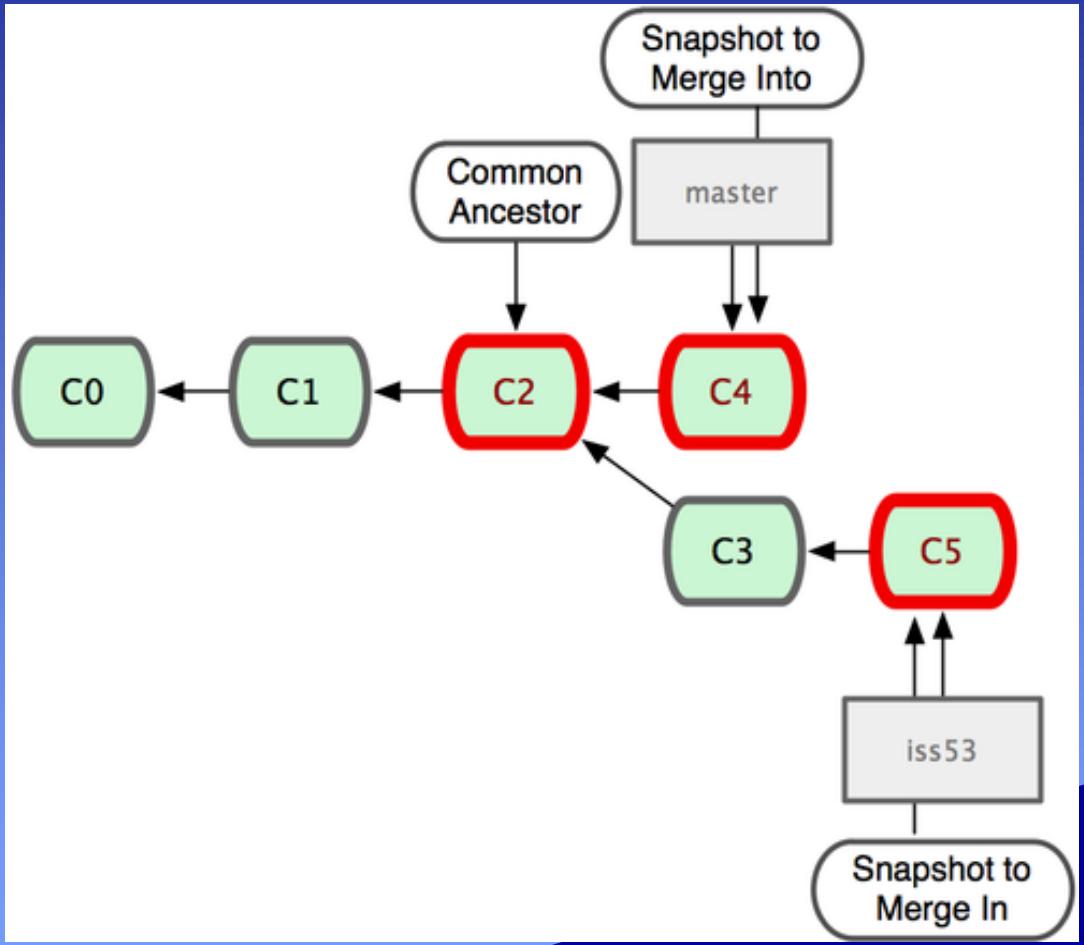

Introduction GIT

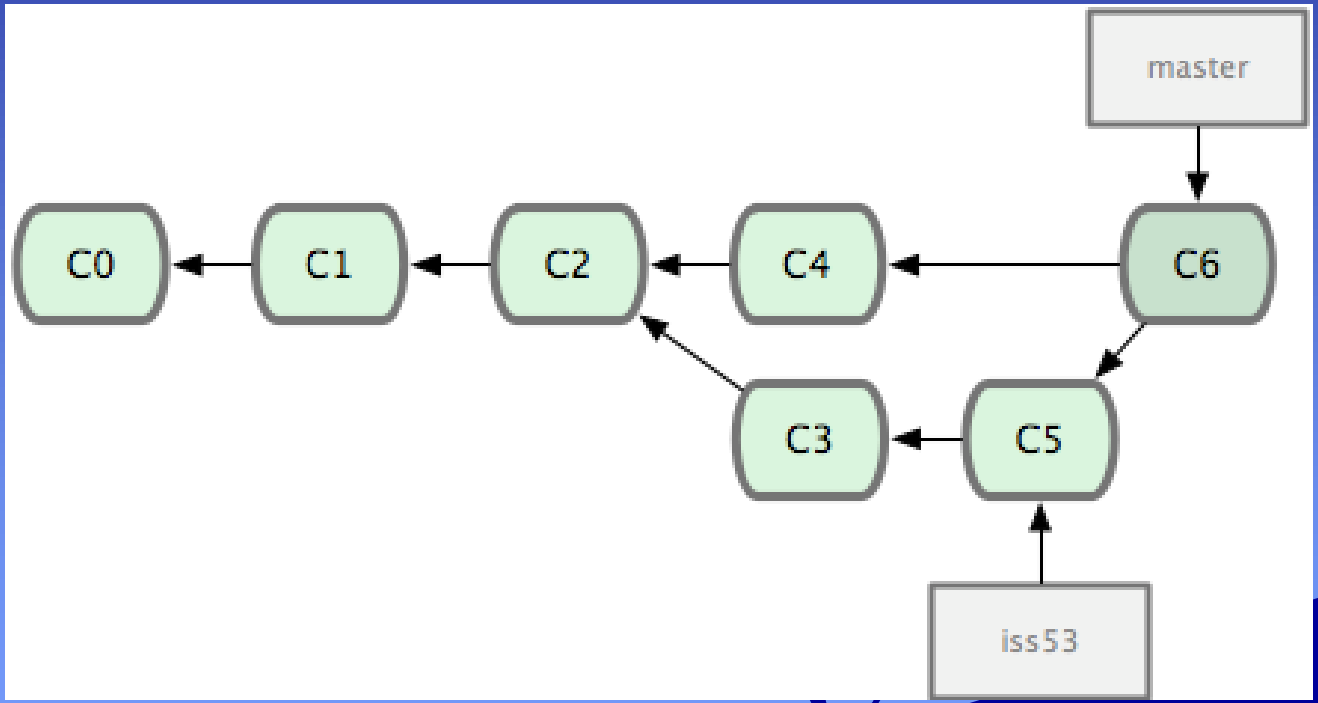

Introduction GIT

- Conflict
  - git status
  - edit the conflict files
  - git commit

```
<<<<<<<HEAD:test.c

=======

>>>>>>>iss53:test.c
```